Supplied By:
COMMERCIAL PLUMBING SUPPLY
877-903-7246
commercialplumbingsupply.com

ZE1203-N ADJUSTABLE HORIZONTAL SIPHON JET WITH ELONGATED FITTING – NO-HUB SERIES

ENGINEERING SPECIFICATION

Zurn ZE1203-N( ) adjustable, horizontal siphon jet water closet provides a rigid system with ( ) no-hub connections. Comes complete with Dura-Coated cast iron right-hand, left-hand, or double main elongated fitting, 2" vent, adjustable gasketed faceplate, universal floor mounted foot supports, corrosion resistant adjustable polymer coupling with integral test cap, fixture bolts, trim, and stud protectors. Includes rear anchor tie down and bonded Neo-Seal gasket.

NOTES

1. 13-1/2" minimum space required between front of foot and rear of anchor to install ZE1203 Series.
2. Minimum 'P' dimension obtainable = 2".
3. Feet bolted to floor using min. 1/2" diameter bolts through back slots on carrier feet.
4. Rear anchor foot mandatory for secure installation.

ZE1203-NR4 (Single)

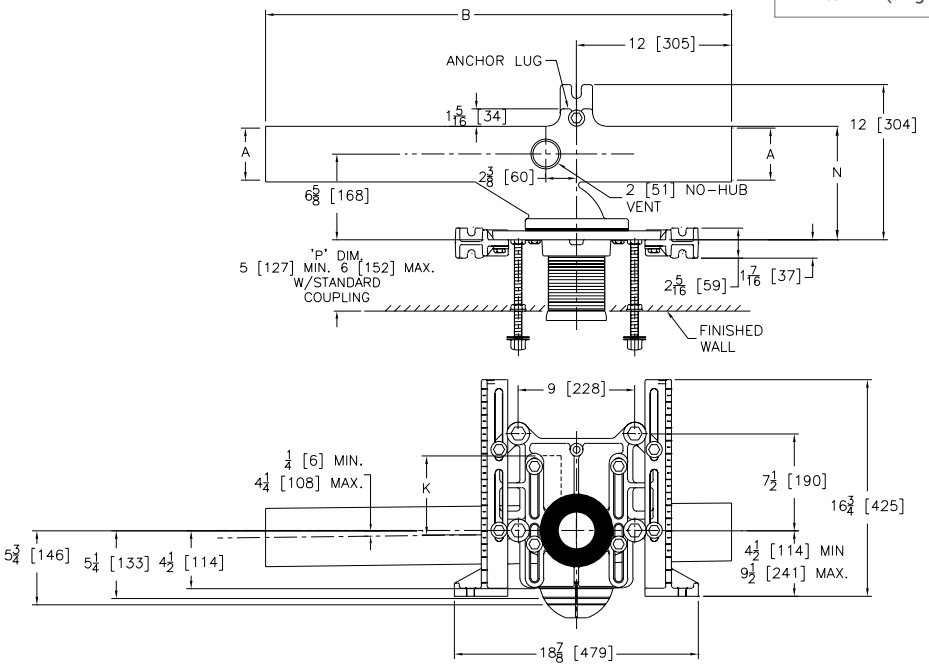

ZE1203-ND4 (Double)

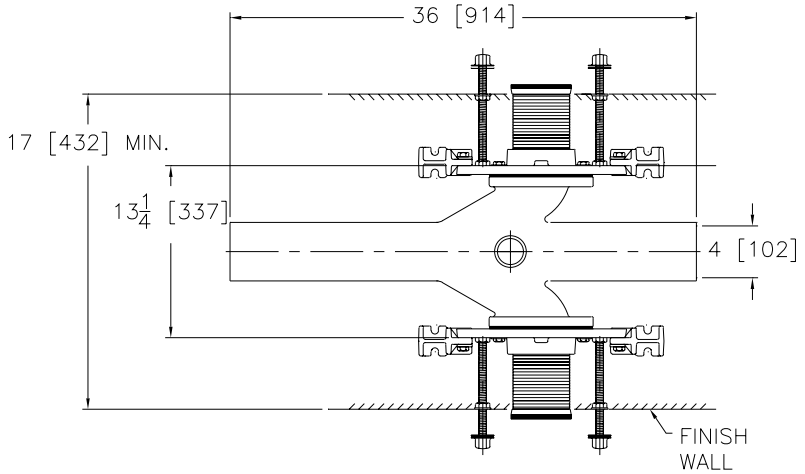

*Regularly furnished unless otherwise specified.
For additional product information, please visit www.zurn.com

Items designated as Best Sellers are most specified and are generally in stock for shipment.
This symbol denotes a product that is engineered to reduce installation and rework time.

For Additional System Tools See "Z1200 Carrier Tools and Accessories" on page 214